ARTICLE

Physisorption of Hydrogen in A, X and ZSM-5 Types of Zeolites at Moderately High Pressures

Xiao-ming Du, Er-dong Wu*

Shenyang National Laboratory for Materials Sciences, Institute of Metal Research, Chinese Academy of Science, Shenyang 110016, China

(Dated: Received on November 3, 2005; Accepted on January 3, 2006)

The hydrogen adsorption properties and uptake capacities of the A, X and ZSM-5 types of zeolites were investigated at temperatures of 77, 195 and 293 K and pressures up to 7 MPa, using a conventional volumetric adsorption apparatus. All hydrogen adsorption isotherms were basically type I, but the maximum in isotherm, a unique feature of supercritical adsorption, was observed at high pressures of 2-5 MPa at 77 K. The isosteric heats of adsorption were determined from the isotherms and the factors that influence their variations were discussed. Different types of zeolites exhibited remarkably different hydrogen uptake, based on both the framework structure and the nature of the cations present. The highest gravimetric storage capacity of 2.55wt% was obtained for NaX-type zeolite at 4 MPa and 77 K. In CaA, NaX and ZSM-5 types of zeolites, hydrogen uptakes were proportional to the specific surface areas, which were associated with the available void volumes of the zeolites. A threshold in hydrogen adsorption observed in NaA and KA was attributed to a pore blocking effect by large cations in KA. A ratio of the kinetic diameter of adsorbate to the effective opening diameter of zeolite was used to judge the blocking effect for physisorption.

Key words: Zeolite, Hydrogen storage, Hydrogen adsorption, Adsorption isotherm

I. INTRODUCTION

Technologies using hydrogen as an energy source have been rapidly developed owing to the demand for environmentally friendly alternate fuels. However, the lack of an economical and safe hydrogen storage medium has been a bottleneck in hydrogen utilizations for many years [1,2]. Various methods for storing hydrogen have been developed which include high-pressure tanks for gaseous hydrogen, cryogenic vessel for liquid hydrogen and metal hydride for solid-state storage systems [3-5]. The first two methods bear the danger of explosion if handled improperly, and the latter one suffers high cost and weight. Recently, attention has been focused on light microporous materials such as carbon and zeolites for storing hydrogen by adsorption [6,7]. Tremendous efforts have been made in the studies of the hydrogen adsorption properties of carbon materials. However, up to now, only limited work has been carried out with regard to the zeolites [8-13]. The zeolites have regular and single size pores and the diameter of the pores can be controlled by changing the size and charge of the exchangeable cations, thus enabling the effective trapping of hydrogen molecules [8]. Weitkamp *et al.* reported that sodalite could store 9.2 mL/g (0.082wt%) of hydrogen if loaded at 573 K and 10 MPa [9]. At a low temperature down to that of liquid nitrogen, hydrogen adsorption values are much higher. For instance, Langmi *et al.* reported the hydrogen storage capacities of 1.54wt%, 1.79wt% and 1.81wt%, obtained at 77 K and 1.5 MPa, for NaA, NaX and NaY types of zoelites respectively [8]. Nijkamp *et al.* observed a hydrogen adsorption of 80 mL/g (0.7wt%) on ZSM-5 at 77 K and 0.1 MPa [7].

In this work, we extensively studied the hydrogen adsorption of some reported zeolites up to a moderately high pressure of 7 MPa at three different supercritical temperatures, in order to reveal the hydrogen adsorption isotherms over a larger pressure range, and to analyze the influence of framework structures and cations of the zeolites on hydrogen uptake.

II. EXPERIMENTS

A system, as shown in Fig.1, was used to volumetrically measure hydrogen adsorption isotherm at 77, 195 and 293 K under the pressures of 0-7 MPa. The volumes of the adsorption cell and the reference cell were 5.64 and 5.18 mL, respectively. The temperature fluctuations in experiment process were less than 1 K. The accuracy of the pressure transducer is 0.2% in full scale (10 MPa). The hydrogen gas used was high-purity grade (99.999%). Five samples of three types of zeolites were selected for the studies, which are NaA (LTA structure type) and two ion-exchanged forms of KA and CaA, NaX (FAU structure type) and ZSM-5 (MFI structure type). The zeolites were commercial products obtained from Shanghai MLC Molecular Sieve Co., Ltd.(A, X) and Shanghai Changfeng Chemical Industrial Factory (ZSM-5).

The framework structures of these zeolites are shown

*Author to whom correspondence should be addressed. E-mail: ewu@imr.ac.cn

 ©2006 Chinese Physical Society

TABLE I The pores size and surface area data of the zeolites and the measured maximum hydrogen uptake at 77, 195 and 293 K in the corresponding experimental pressure range[a]

Material	Free diameter of aperture/Å	$S_{BET}/(m^2/g)$	H_2 uptake (wt%)		
			77 K	195 K	293 K
NaX	9.0	565	2.55	0.98	0.40
ZSM-5	5.6	445	1.97	0.65	0.38
CaA	5.0	428	1.74	0.61	0.31
NaA	4.0	32.6	1.64	0.44	0.27
KA	3.0	32.0	0.07	N/A	N/A

[a]The errors of the data are the unity in the last significant decimal of the values

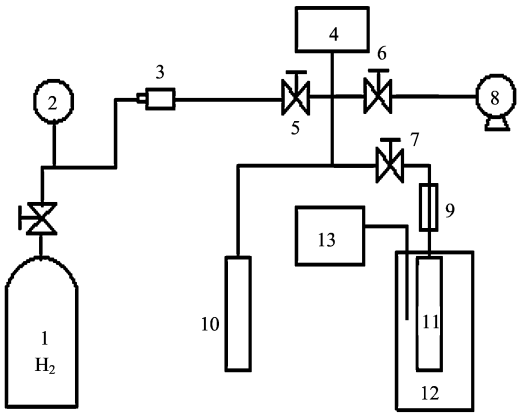

FIG. 1 Schematic drawing of volumetric adsorption system. 1. hydrogen source, 2. pressure gauge, 3. purifier, 4. pressure transducer, 5,6,7. diaphragm valves, 8. vacuum pump, 9. filter, 10. reference cell, 11. adsorption cell, 12. cryostat, 13. thermoscope.

in Fig.2 and their approximate pore sizes provided by the manufacturers and the measured specific surface areas are given in Table I. The BET surface area measurements were performed on a Micrometitics ASAP 2010 machine using nitrogen adsorption at 77 K. Prior to adsorption measurements, the adsorption cell was kept empty, and a base isotherm was obtained to correct the system errors. Subsequently, 0.5-0.65 g of the zeolite samples were dehydrated at 673 K and below 1 Pa for 12 h. The samples were then cooled to the adsorption temperatures. The adsorption isotherms were measured by cumulatively expending the hydrogen gas from reference cell at a known pressure to adsorption cell and monitoring the final equilibrium pressure in the system after connection of the two cells for 20 min. The desorption isotherms were subsequently measured following the measurements of the adsorption isotherms. The specific equilibrium amount adsorption of hydrogen n, in the adsorption cell volume V, at pressure P and temperature T, was calculated based on the equation of state of real gas. The compressibility factor was obtained from the experimental P-V-T data [14]. The adsorption cell volume V after the loading of the adsorbent sample was determined by calculation involving the helium density of zeolites. Considering fluctuation of the pressure due to the precision of temperature controller and the error of adsorption cell volume calibrated from above method, the standard deviation of the adsorption isotherm data was ± 2.5%.

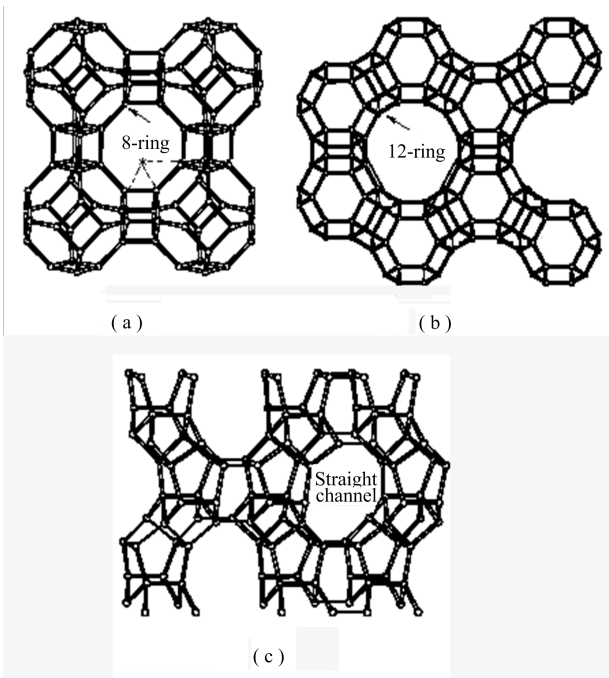

FIG. 2 Framework structures of (a) A-type zeolite, (b) X-type zeolite, (c) ZSM-5 type zeolite. The relative position of a cation on the 8-ring of A-type zeolite in (a) is marked by a star. Only the straight channels can be seen in the diagram for ZSM-5 in (c), while the zigzag channels are distributed as crosses, perpendicular to the straight channels.

III. RESULTS AND DISCUSSION

The measured isotherms for adsorption of H_2 on A, X and ZSM-5 zeolites under the pressure of 0-7 MPa are

ISSN 1003-7713/DOI:10.1360/cjcp2006.19(5).457.6 ©2006 Chinese Physical Society

shown in Fig.3 (77 K) and Fig.4 (195 and 293 K), respectively, and the corresponding maximum values are reported in Table I. The adsorption/desorption cycles have also been measured for the zeolites at 77 K. For all these zeolites, desorption traces follow the same path as adsorption, indicating physisorption in the materials. In general, all these isotherms are Type I in shape according to the Brauneur classification, which is expected for physisorption of small adsorbates on a microporous adsorbent. However, by extending the pressure to a moderately high pressure of 7 MPa, maximum adsorptions in the isotherms at 77 K have been observed (Fig.3), which is not applicable for Type I isotherm describing adsorption of vapor. The decline of adsorption at high pressure is unique for adsorption of supercritical fluid, and has been frequently observed, such as in H_2 adsorption on AX-21 activated carbon [15] and CH_4 adsorption on K02 activated carbon [16]. The phenomenon has been explained as a result of the higher growth rate of density of the gas phase than that of the adsorbed phase at high pressure [17]. Unfortunately, a complete theory describing above phenomenon has not been established so far.

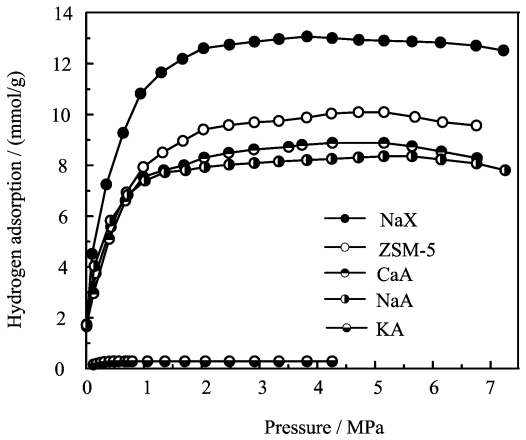

FIG. 3 Hydrogen adsorption isotherms on zeolites at 77 K.

Obviously, the hydrogen uptakes are higher at low temperatures than that at high temperatures for physisorption in these zeolites. It can be seen in Fig.4 that the amount of adsorbed hydrogen at 195 and 293 K increases linearly with pressure during loading as expected in terms of the ideal gas law. As shown in the related table and figures, the hydrogen uptakes of the zeolites used in this study differ significantly. The adsorption capacity of the zeolites at any given pressure decreases in the order of NaX > ZSM-5 > CaA > NaA >KA, and basically keeps the same order at three different temperatures. The highest hydrogen uptakes were obtained by NaX, i.e. 0.40wt%, 0.98wt% and 2.55wt% at 293 K/7 MPa, 195 K/7 MPa and 77 K/4 MPa, respectively. The hydrogen uptake obtained at 77 K is higher than that of some other reported zeolite materials (cf. 1.20wt% [18] and 1.79wt% [8] for NaX

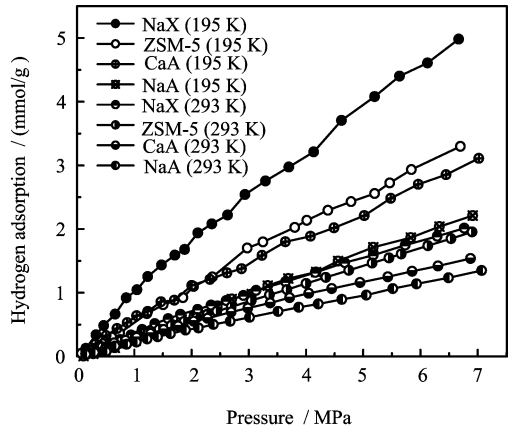

FIG. 4 Hydrogen adsorption isotherms on zeolites at 195 and 293 K.

at 77K [8]), which can partially be attributed to the higher pressure applied in the experiments. However, as shown in Fig.3, even under a moderate pressure of 1.5 MPa at 77 K, the hydrogen adsorption of NaX has reached 2.28wt%, which is close to the maximum saturation value, and already somewhat higher than that obtained by Langmi *et al.* at the same condition for NaX [8]. It should be mentioned that the observed order of adsorption capacity at room temperature for NaX and NaA is different from that obtained by Langmi *et al.* [8]. In Langmi *et al*'s work [8], the adsorption capacity at room temperature followed an order of NaX < NaA; the NaA-type zeolite exhibited a moderate hydrogen uptake of 0.28wt% (1.5 MPa), but the uptake in FAU type zeolites was ignorable. The exact cause for the differences is not clear. It may be due to the difference in the degree of dehydration of the samples. The actual syntheses processes which determine some detailed micro-structures of the zeolites could also play a role in the hydrogen adsorption capacity.

For the hydrogen uptake of other zeolites, our results are basically consistent with those obtained by other researchers [7,8,19], which could confirm the reliability of our measurements. The hydrogen uptakes for NaA are in reasonable agreement with those of Langmi *et al.* and Darkrim *et al.* [8,19]. Nijkamp *et al.* reported the hydrogen uptake of 0.7wt% for ZSM-5 at 77 K and 0.1 MPa [7]. Under comparable conditions, our measurement for ZSM-5 was 0.71wt%. Moreover, we have also obtained the higher hydrogen uptake of 1.97wt% for ZSM-5 at 5 MPa.

The isosteric heat of hydrogen adsorption for the zeolites has been determined by a widely used method of Clausisus-Clapeyron equation:

$$-\mathrm{R}[\mathrm{d}(\ln P)/\mathrm{d}(1/T)]n = -H$$

The equation relates the adsorption heat effects to the temperature dependence of the adsorption isotherm. For this purpose, the data in Fig.3 and Fig.4 for NaX,

ISSN 1003-7713/DOI:10.1360/cjcp2006.19(5).457.6 ©2006 Chinese Physical Society

ZSM-5, CaA and NaA were plotted in the form of ln$P$ *vs.* $1/T$, respectively, and thereafter the heat of adsorption ΔH for each adsorbed amount n is obtained from the local slopes of curves. In Fig.5, the isosteric

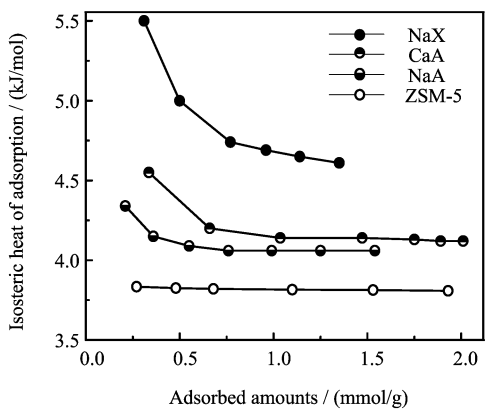

FIG. 5 Isosteric heats of adsorption ΔH *vs.* adsorbed amount for four adsorbents (NaX, NaA, CaA, ZSM-5).

heats of adsorption of hydrogen on the four adsorbents are shown as the function of the adsorbed amounts. The isosteric heats of adsorption of a few kJ/mol indicate physisorption. The data suggest that the influences of the isosteric heats of adsorption on the hydrogen uptakes are complicated, and only the values of the same type of zeolites can be compared. As shown in Fig.5, except for ZSM-5, the isosteric heats of adsorption on all other three zeolites decrease remarkably with the increase of the adsorbed amounts. The decreases could be attributed to the energetic heterogeneities of the adsorbents [10]. For heterogeneous surfaces in the micropores of some adsorbents such as CMS and activated carbon, vertical interactions between the solid surface molecules and gas molecules decrease as the adsorbed amount increases [20]. The X and A types of zeolites are energetically heterogeneous, which could be caused by non-uniform distribution of silica-alumina in the framework, location and distribution of one or more cations of different charge densities in the framework and presence of trace water in the cages etc. [10]. When the univalent Na^+ ions are replaced by divalent Ca^{2+} ions in the A-type zealites, the surface of the zeolite pores became more energetically heterogeneous for hydrogen molecules because of the increase of the electrostatic force field. Hydrogen molecules preferably occupy the location with high electrostatic field, resulting in a larger adsorption heat for CaA. The ZSM-5 is hydrophobic with a high silica-to-alumina ratio. It can provide an energetical homogenization for adsorption of hydrogen molecules. The results show that the isosteric heat of adsorption for hydrogen on the energetically homogenous and nonpolar structure of zeolites is relatively constant and small. This conclusion is consistent with that obtained by Golden who investigated the adsorption of hydrogen on silicalite which has the same framework structure as that of ZSM-5 [10]. However, the isosteric heat of adsorption for silicalite was 6 kJ/mol, which is obviously greater than the value of 3.8 kJ/mol obtained in this work for ZSM-5. A plausible explanation is that the silicalite has a higher Si/Al ratio than that of ZSM-5. Ding has also observed a similar phenomenon when investigating the adsorption of alkanes on silicalite and ZSM-5 [21].

The influence of ion-exchange on hydrogen adsorption can be better demonstrated by a comparison of the data for Na, Ca and K forms of the same A-type zeolites at 77K. Hydrogen adsorption decreased from Ca^{2+} through Na^+ to K^+ in these zeolites. As shown in Table I, the maximum uptakes of CaA, NaA and KA zeolites at 77 K were 1.74wt%, 1.64wt% and 0.07wt%, respectively. The trend of the adsorption in these zeolites may be explained by Fraenkel's earlier observations and postulation that hydrogen uptake in zeolites was related to the available void volume per germ of zeolite which decreases with the increasing size and number of the exchangeable cations [22]. The KA containing larger alkali metal K^+ has the same number of exchangeable cations as that of NaA, but occupy a substantially bigger space, with a consequent reduction in void volume available for hydrogen adsorption. Whereas, when the Na^+ ions in NaA are replaced by alkaline earth metal divalent cations (i.e. Ca^{2+}), the number of cations in zeolites decreases, thus the available void volume increases accordingly. However, the significant difference in uptakes between KA and NaA, and the nearly null absorption for KA would not be explained by the above assumption. The threshold in hydrogen uptake observed between KA and NaA appears to be associated with the pore blocking effect of the cations in A-type zeolites. As it is known that in A-type zeolites, the sites on the large 8-ring pores that control entry into the internal space of the main cages of the LTA structure (see Fig.2(a)) are basically free from the Ca^{2+}, but could be occupied by Na^+ and K^+. The partial blocks of the opening of the 8-ring pores by Na^+ and K^+ result in reduced effective pore sizes for the NaA and KA (see Table I). The smaller pore size of about 3 Å for KA caused by the blocking of the larger K^+ appears to be critical for the access of hydrogen molecules.

Fraenkel had used a σ-to-d_p ratio of the kinetic diameter, σ of gas molecule to the effective opening diameter, d_p of zeolite to measure the blocking effect of exchangeable cations in A-type zeolite for the encapulation of gas molecules at ambient temperatures and high pressures [22]. He suggested that the criterion to define the blocking of zeolite pores for encapulation is the ratio being larger than unity. In Fraenkel's measurements, the KA with effective opening diameter (d_p≈2.9 Å) close to the kinetic diameter of hydrogen molecule (σ=2.89 Å) showed the highest but unstable encapulation capacity, and the effective blocking effect occurred in RbA (2.9 Å>d_p> 2.5 Å) and CsA (d_p≈2.5 Å) [12,22]. Kayiran and Darkrim have also observed moderate hydrogen

ISSN 1003-7713/DOI:10.1360/cjcp2006.19(5).457.6 ©2006 Chinese Physical Society

adsorption capacity for KA at the room temperature [19]. Whereas, in our measurements of hydrogen adsorption in A-type zeolites, the effective blocking for physisorption appears to occurre in KA. The critical σ-to-d_p ratio for KA is likely to be the cause of the ambiguity observed on the hydrogen adsorption capacity of KA at the room temperature. It should be noticed that Fraenkel's measurements are performed at 300 °C and very high pressures of up to 91 MPa [12]. Under such a condition, the hydrogen molecules are squeezed through the opening, and encapsulated into the cages of the zeolites. Therefore, although the σ-to-d_p ratio may still be used as a criterion for the judgment of blocking effect in physisorption of zeolites, there would be some differences in the meaning of block and the corresponding threshold between the encapsulation and the physisorption of hydrogen molecules in the zeolites. To effectively detain hydrogen molecules in encapsulation at ambient temperatures, the opening diameter of the zeolite pores has to be substantially smaller than that of the hydrogen molecules. Whereas for physisorption of hydrogen at cryogenic temperatures, the opening diameter has to be at least slightly larger to ensure unimpeded access and effective diffusion of hydrogen molecules to the internal space of the zeolites. Therefore, the ratio of unity means unblocked in encapsulation of hydrogen, but may mean blocked in physisorption under different conditions. In our measurements, a threshold for an effective takeoff of hydrogen adsorption appears to exist at a σ-to-d_p ratio smaller than unity with a d_p between that of KA and NaA.

Such judgment could also be confirmed by the results of the BET surface area measurement. In Fig.6, the total amount of hydrogen adsorbed by each zeolite is ploted against its BET surface area, and a direct correlation between these two experimental parameters can be found. For CaA, NaX and ZSM-5, the hydrogen uptake relates proportionally to the BET surface area.

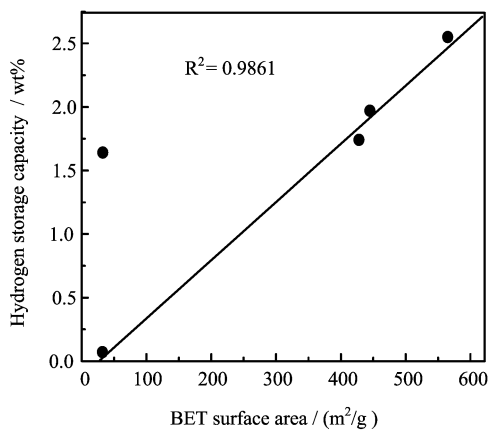

FIG. 6 Correlation between hydrogen storage capacity and BET surface area (see Table I). The correlation coefficient is also indicated.

The exception is NaA, which shows an unexpectedly low BET surface area, but takes up 1.64wt% hydrogen at 77 K. The experimental error in BET measurement is the most likely reason for this. The BET surface areas are measured by the adsorption of nitrogen at 77 K. An unexpectedly low BET surface area will be obtained if that the access of nitrogen molecules to the internal pore space was restricted by a smaller opening diameter of the zeolite pores. The effective opening diameter of NaA (d_p≈3.5 Å) is comparable to the kinetic diameter of nitrogen molecule (σ=3.64 Å), so the block of the opening will occur for nitrogen in NaA, with the unexpectedly lower BET value as a direct consequence. Such judgment will also apply to that of KA. Based on the above observations, the σ-to-d_p ratio close to unity appears to ensure the blocking of the physisorption of adsorbate molecules in A-type zeolites at cryogenic temperatures. The threshold for effective adsorption of nitrogen should correspond to a σ-to-d_p ratio with a d_p between that of NaA and CaA. However, a more accurate value of threshold is still difficult to be established, due to the considerable variations in the values of σ and d_p from different references. The above quoted values are basically from Fraenkel's and Golden *et al*'s early references [12,22,10], but in some other references, these values have been presented differently (σ=2.958 Å for H_2 [23], σ=3.572 Å for N_2 [24], d_p4.1 Å for Na^+ [8], d_p≈ 3.0 Å for K^+ [9]).

For the hydrogen storage capacities of NaX and ZSM-5, the pore blocking effect is not valid. NaX has open frameworks with 12-ring (see Fig.2(b)), and entry to most of the internal pore space is not expected to be restricted even by the largest cations. Although access is unlikely to be restricted, the ions themselves may occupy significant volumes and affect the hydrogen adsorption capacity [8]. The ZSM-5 has a MFI type structure consisting of straight channels and zigzag channels (see Fig.2(c)), which do not contain metal cations in the frameworks [7]. As shown in Table I and Fig.6, the hydrogen storage capacities of these zeolites are governed by their specific surface areas. The linear relationship between hydrogen adsorption capacity and BET surface area has also been observed by Langmi *et al.* and Nijkamp *et al.* [7,8]. The large BET surface areas of the zeolites appear to relate to the more available void volumes in their pores. Nijkamp *et al.* has shown that there is a linear relationship between hydrogen adsorption capacity and the available void volumes for a few zeolites with their pore sizes and structures similar to that of NaX and ZSM-5 [7]. It should be clarified that all the zeolites used in this studies are microporous adsorbents with their pore sizes below 10 Å. The linear relationship between hydrogen adsorption capacity and BET surface area only applies to these types of zeolites. According to the measurements by Nijkamp *et al.*, the hydrogen adsorption capacities of the mesoporous silicas, aluminas or MCM-41 are smaller than that of microporous adsorbents such as ZSM-5.

ISSN 1003-7713/DOI:10.1360/cjcp2006.19(5).457.6 ©2006 Chinese Physical Society

There is a large difference in the internaction potentials of hydrogen molecules and pore walls between micropores (pore sizes < 20 Å) and mesopores adsorbents (20 Å ≤ pore sizes <500 Å). The close proximity of the wall of micropores results in overlapped interaction potential between the pore walls and the adsorbate molecules [25,26]. The enhanced interaction leads to the stable monolayer adsorption on the pore walls for the adsorbate molecules, thus the larger specific surface area relates directly to the higher adsorption capacity. However, a maximum adsorption capacity will reach for a certain sized micropore. The enhanced interaction from overlapped interaction potential will decline in mesoporous adsorbents with larger pore diameters, and the predominant adsorption mechanism for these adsorbents will be the capillary condensation [27]. Capillary condensation does not occur at above critical temperature of the adsorbate. Therefore, the hydrogen adsorption capacities of the mesoporous adsorbents are low, although their BET surface areas are relatively large.

IV. CONCLUSION

Hydrogen adsorption measurement on A, X, and ZSM-5 types of zeolites were carried out at 77, 195 and 293 K and pressures up to 7 MPa by volumetric method. The adsorption/desorption isotherms of the zeolites are basically Type I, and physisorption was the predominant mechanism for these materials. The variation of isosteric heat of adsorption is caused by the energetic heterogeneity of the adsorbent, which is associated with the structure of zeolite and the type of cation in the framework. The hydrogen uptakes strongly depend on the framework structures and compositions of the zeolites. The highest hydrogen storage capacity of 2.55wt% (at 77 K and 4 MPa) was observed for FAU-type of zeolite NaX. Based on our measurements, this type of zeolite has shown a high potential as low-cost, safe hydrogen storage media for certain applications. Linear relationship between hydrogen uptake capacity and the specific surface area was observed in CaA, NaX and ZSM-5 types of micropore zeolites, which is attributed to the larger available void volumes in the pores of these zeolites. For NaA and KA types of zeolites, the surface areas can not be properly measured due to their smaller pore sizes. The blocking of the entry to the internal space of the zeolite pores by large cations is the likely cause of a threshold in hydrogen adsorption observed between NaA and KA. A ratio of the kinetic diameter of adsorbate to the effective opening diameter of zeolite initially defined by Fraenkel has been used to judge the blocking effect for physisorption of hydrogen.

V. ACKNOWLEDGMENTS

This work was supported by the Innovation Program of Chinese Academy of Science.

[1] M. S. Dresselhaus, K. A. Williams and P. C. Eklund, Bull. Mater. Res. Soc. **24**, 45 (1999).
[2] A. Zttel, P. Sudan, P. Mauron, T. Kiyobayashi, C. Emmenegger and L. Schlapbach, Int. J. Hydrogen Energy **27**, 203 (2002).
[3] L. Schlapbach, MRS Bull. **27**, 675 (2002).
[4] S. M. Aceves, G. D. Berry and G. D. Rambach, Int. J. Hydrogen Energy **23**, 583 (1998).
[5] A. Dedieu, *Transitional Metal Hydrides*, New York: Wiley Pub Inc, (1992).
[6] F. L. Darkrim, P. Malbrunot and G. P. Tartaglia, Int. J. Hydrogen Energy **27**, 193 (2002).
[7] M. G. Nijkamp, J. E. M. J. Raaymakers, A. J. van Dillen and K. P. de Jong, Appl. Phys. A: Materials Science and Processing **72**, 619 (2001).
[8] H. W. Langmi, A. Walton, M. M. Al-Mamouri, S. R. Johnson, D. Book, J. D. Speight, P. P. Edwards, I. Gameson, P. A. Anderson and I. R. Harris, J. Alloys Compd. **356-357**, 710 (2003).
[9] J. Weitkamp, M. Fritz and S. Ernst, Int. J. Hydrogen Energy **20**, 967 (1995).
[10] T. C. Golden and S. Sircar, J. Colloid Interface Sci. **162**, 182 (1994).
[11] B. D. Franekel and J. Shabtai, J. Am. Chem. Soc. **14**, 7074 (1997).
[12] B. D. Franekel, J. Chem. Soc., Faraday Trans. I **77**, 2039 (1981).
[13] B. D. Franekel, Chemtech. **11**, 60 (1981).
[14] J. M. Smith, H. C. Van Ness and M. M. Abbott, *Introduction to Chemical Engineering Thermodynamics*. Singapore: McGraw-Hill, (1997).
[15] L. Zhou and Y. P. Zhou, Sci. China, Ser. B **26**, 473 (1996).
[16] M. Li and A. Z. Gu, J. Colloid Interface Sci. **273**, 356 (2004).
[17] P. G. Menon, Chem. Rev. **68**, 277 (1968).
[18] V. B. Kazansky, V. Y. Borovkov, A. Serich and H. G. Karge, Micropor. Mesopor. Mater. **22**, 251 (1998).
[19] S. B. Kayiran and F. L. Darkrim, Surf. Interface Anal. **34**, 100 (2002).
[20] Y. D. Chen, R. T. Yang and P. Uawithya, AIChE J. **40**, 577 (1994).
[21] Z. X. Chen, J. G. Lu, X Y. Liu and T. F. Ding, Chin J. Chem. Eng. **8**, 283 (2000).
[22] B. D. Franekel, J. Chem. Soc., Faraday Trans. I **77**, 2041 (1981).
[23] F. Darkrim, A. Aoufi and P. Malbrunot, J. Chem. Phys. **112**, 5991 (2000).
[24] Y. F. Yin, T. Mays and B. McEnaney, Langmuir **15**, 8714 (1999).
[25] D. H. Evertt and J. C. Powl, J. Chem. Soc., Faraday Trans. **72**, 619 (1976).
[26] G. C. Maitland, M. Rigby, E. B. Simth and W. A. Wakeham, *Intermolecular Forces: Their Origin and Determination*, Clarendon: Oxford, (1981).
[27] S. J. Gregg and K S W. Sing, *Adsorption, Surface Area and Porosity*, 2rd ed. New York: Academic Press Inc, 118 (1982).

ISSN 1003-7713/DOI:10.1360/cjcp2006.19(5).457.6 ©2006 Chinese Physical Society